Stainless Steel Portable Drum Tipper

Sanitary Design

Features

- 38”, 48” and 60” tipping height
- Up to 115 degree tipping angle
- 1,000 lbs capacity
- Stainless Steel
- Gel battery and on board charger

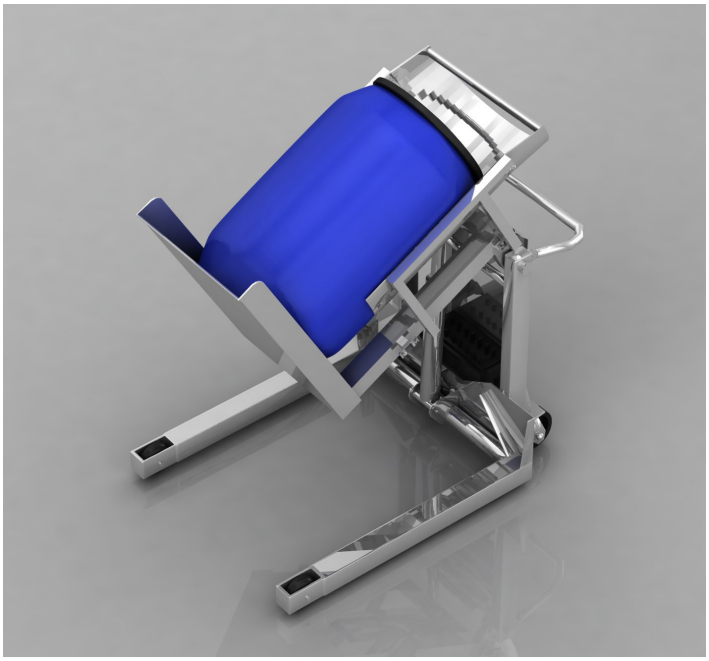

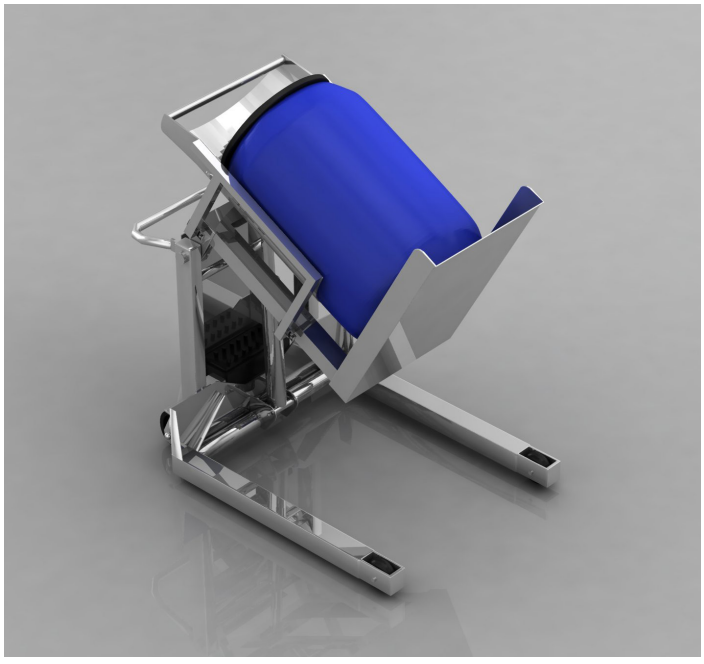



Stainless Steel Portable Drum Tipper

Sanitary Design

Drawing samples

