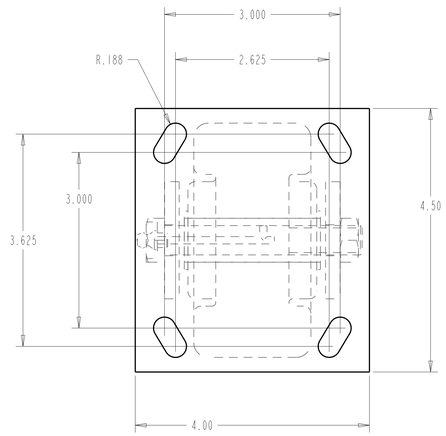


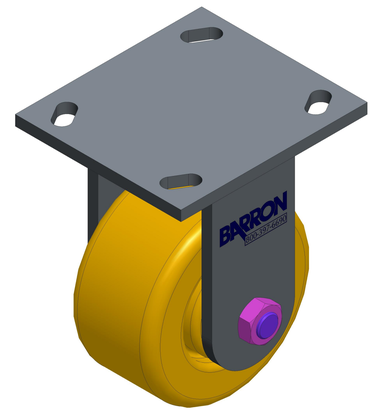


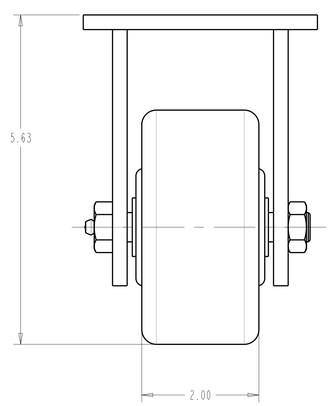


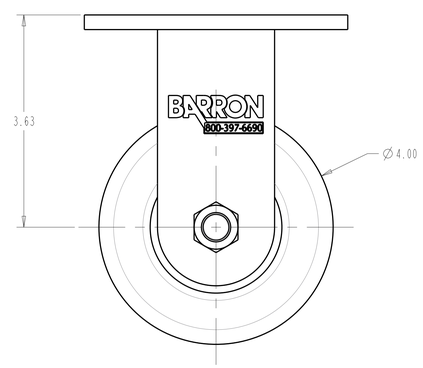


| REV | REVISION DESCRIPTION | ECN NO. | DATE | BY |
|---|---|---|---|---|
| F | | | | |
| E | | | | |
| D | | | | |
| C | | | | |
| B | | | | |
| A | INITIAL RELEASE | | | |

UNSPECIFIED MACHINED TOLERANCES

| DECIMAL | INCHES | [mm] |
|---|---|---|
| .0 | ±.055 | (±1.40) |
| .00 | ±.010 | (±0.25) |
| .000 | ±.005 | (±0.13) |
| FRACTIONAL | ±1/32 | |
| ANGULAR | ±1/2° | |

UNSPECIFIED FABRICATION TOLERANCES

| | INCHES | [mm] |
|---|---|---|
| SHEET METAL BENDS | ±1/32 | (±0.8) |
| WELDED FEATURES | ±1/16 | (±1.6) |
| ANGULAR | ±1° | |

SURFACE FINISH
√125 (UNLESS OTHERWISE NOTED)
DEBUR AND REMOVE ALL SHARP EDGES

BARRON EQUIPMENT COMPANY INC. OVERHEAD DOORS

| | | | |
|---|---|---|---|
| | | MATERIAL DESC: | |
| SCALE: | 1.000 | SURFACE TREATMENT: | |
| DATE: | | SURFACE ROUGHNESS: | |
| W/O #: | | PARAMETRIC: | CREO2 |
| TITLE: | | | |
| PART NO: | 41-42-50-PHR | | |

PROJECTION TYPE:
SHEET NO: 1 OF 1
ALTERNATE DRAWING NO:
UNITS: INCH [mm]
SIZE: E

HAWK TECHNOLOGY LTD. PROJECT NO. 16702-T2