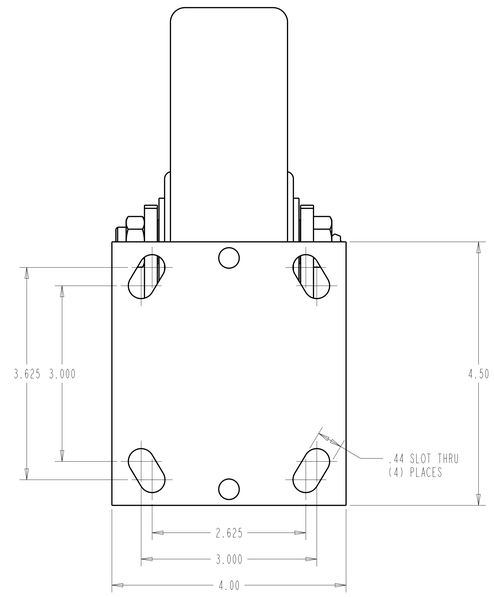

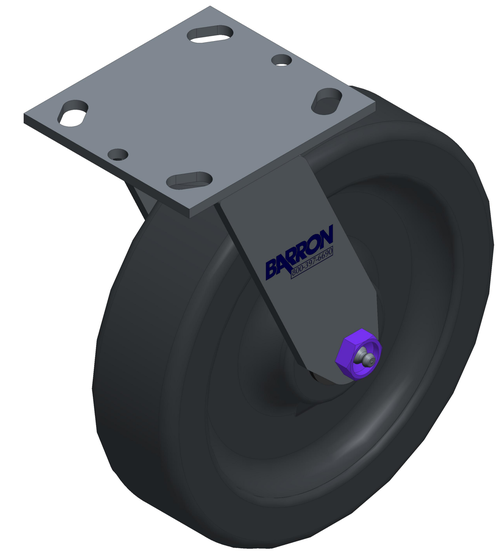

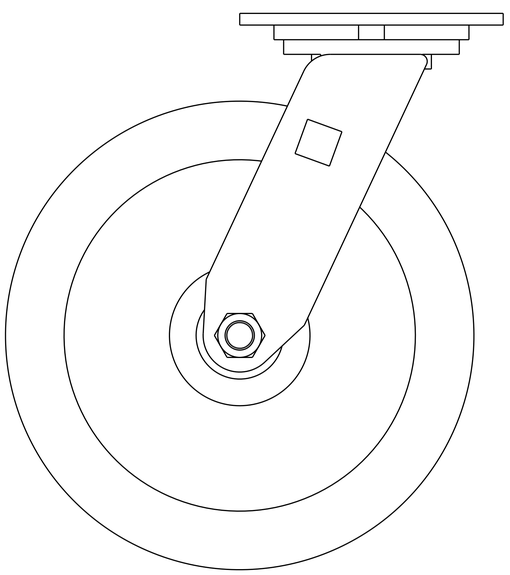

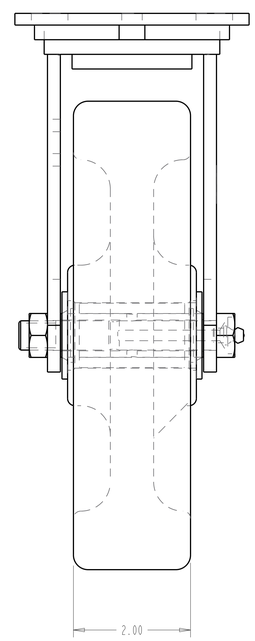

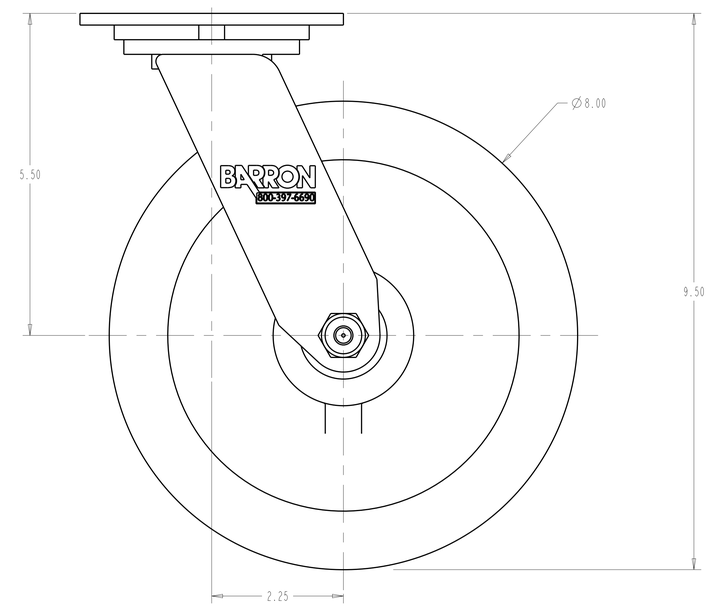

REV	REVISION DESCRIPTION	ECN NO.	DATE	BY
F				
E				
D				
C				
B				
A	INITIAL RELEASE		JUL2017	BL

UNSPECIFIED MACHINED TOLERANCES

DECIMAL	INCHES	[mm]
.0	±.055	[±1.40]
.00	±.010	[±0.25]
.000	±.005	[±0.13]

FRACTIONAL ±1/32
ANGULAR ±1/2°

UNSPECIFIED FABRICATION TOLERANCES

	INCHES	[mm]
SHEET METAL BENDS	±1/32	[±0.8]
WELDED FEATURES	±1/16	[±1.6]
ANGULAR	±1°	

SURFACE FINISH
✓125 (UNLESS OTHERWISE NOTED)

DEBUR AND REMOVE ALL SHARP EDGES

BARRON EQUIPMENT COMPANY INC.
OVERHEAD DOORS

SCALE:	1.000	MATERIAL DESC:	
DATE:	JUL2017	SURFACE TREATMENT:	
W/O #:		SURFACE ROUGHNESS:	
		PARAMETRIC:	CREO 2
TITLE:		SWIVEL - CASTER	
PART NO:	40-82-50-PHR		

PROJECTION TYPE:
SHEET NO: 1 OF 1
ALTERNATE DRAWING NO:
UNITS: INCH [mm]
SIZE: E

HAWK TECHNOLOGY LTD.
PROJECT NO. 16914