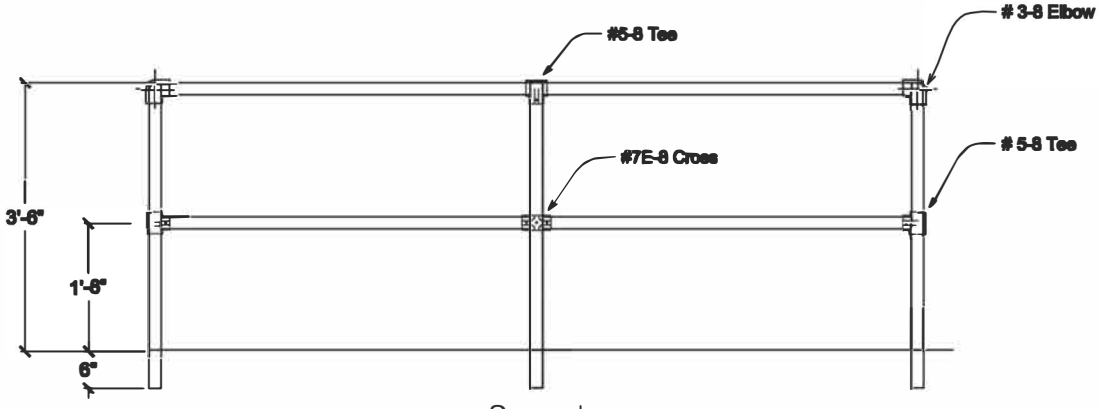

Cored
Handrail

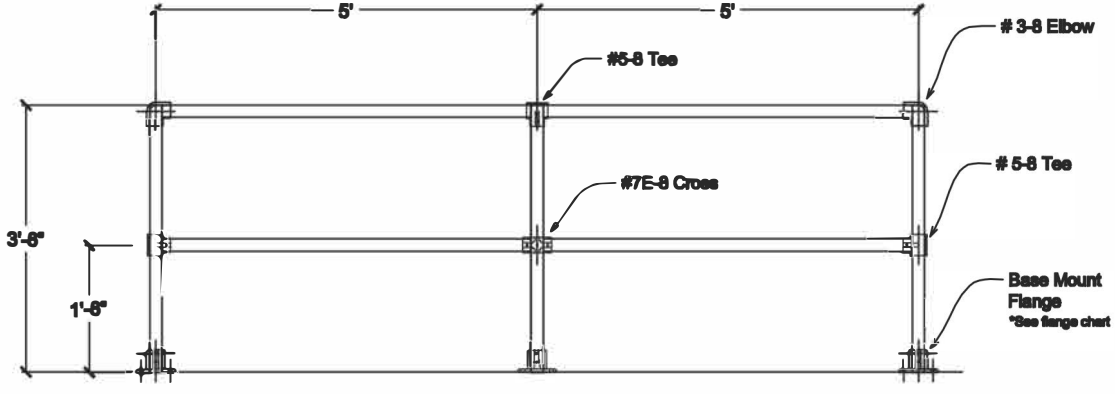

Plated Mount
Handrail

3-8 Elbow

#5-8 Tee

#7E-8 Cross

NO.	REVISIONS	DATE	APPROVED

BARRON
EQUIPMENT COMPANY INC.
OVERHEAD DOORS

PROJECT

CUSTOMER

DESCRIPTION

2 line Pipe & Plastic Rail
with Speed Rail Fittings
Core & Plate Mounted

DRAWN BY ACB
APPROVED BY
DATE
PROJECT NO.
SCALE
FINISH
DRAWING NO.
MATERIAL
SHEET 1 OF 1