BARRON EQUIPMENT COMPANY INC. OVERHEAD DOORS

Security Cabinet

- NAI - 98167



These cages are designed to provide safe, lockable security of valuables and/or dangerous materials.

- Equipped with two shelves constructed of 1½" square extruded aluminum tube with 1¼" x 2¼" T-Bar welded perpendicular to the length.
- Reinforced solid sheet base.
- Sides and doors are designed with louvers to create airflow. Lockable door latch increases security.
- Equipped with four 5" plate type swivel casters.
- All welded aluminum construction.
- Five-Year Guarantee against material defects and workmanship.
- Lifetime Guarantee against rust and corrosion.

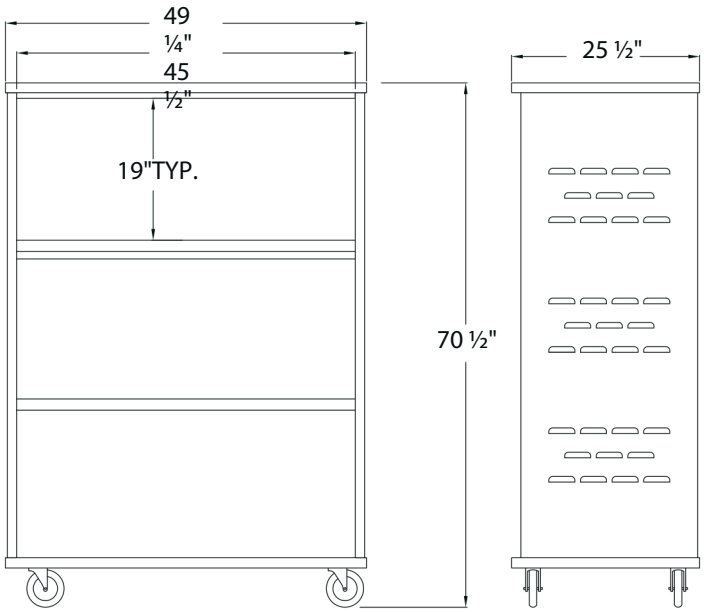

Security Cages

Model No.	Size W-H-D	Interior Shelves	Shelf Size	Clear Space	Lock Type	Ship Lbs.
Solid Security Cage With Vents						
98167	49" x 72" x 26"	3	24" x 45"	19"	Lever	190

Equipped with four 5" plate type swivel casters.

(800)397-6690 • Fax (563) 391-1321
4710 N Brady St • Davenport, IA 52806
www.barroneq.com