BARRON
EQUIPMENT COMPANY INC.
OVERHEAD DOORS





Security Cabinet

- NAI - 99551

The New Age 99551 Mobile Security Cabinet providesa secure, safe place to store valuable or dangerous items. The all-welded aluminum construction is durable and corrosion resistant. Double doors have a stainless steel hasp, ensuring your product is secure. Stainless steel door hinges are replaceable to allow for long-term use.

Three interior shelves adjust in 2-inch increments to hold items of different sizes. There are four casters welded to the base of the unit to provide mobility. Two of these casters are swivel, while the other two are rigid, making the cage easy to maneuver.

- All-welded aluminum construction is durable and corrosion resistant.
- Double doors are reinforced with tubes to add structure.
- Stainless steel hasp keeps the door locked to prevent unauthorized access.
- Replaceable stainless steel door hinges.
- ⅛" Sheet base is reinforced with a 1¼" x 1½" x .100". wall tube to add strength and durability.
- Four 5" swivel, plate type casters have polyurethane tires and provide mobilit y.
  - Caster plates are welded to the base
- Five-Year Guarantee against material defects and workmanship.
- Lifetime Guarantee against rust and corrosion.

(800)397-6690 • Fax (563) 391-1321
4710 N Brady St • Davenport, IA 52806
www.barroneq.com

BARRON EQUIPMENT COMPANY INC. OVERHEAD DOORS

Security Cabinet

- NAI - 99551

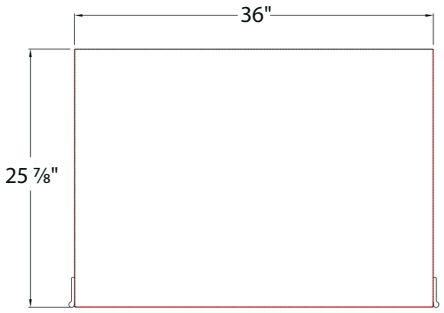

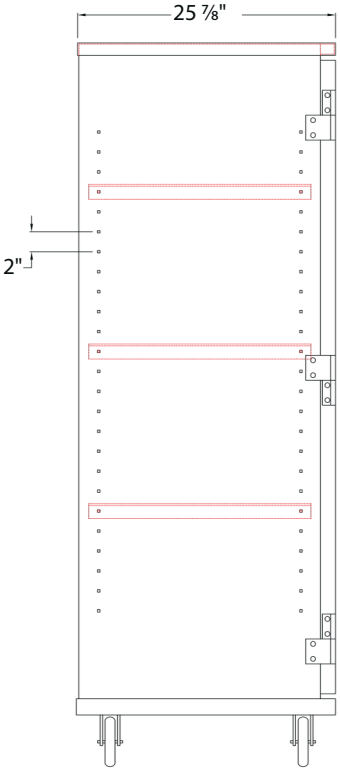

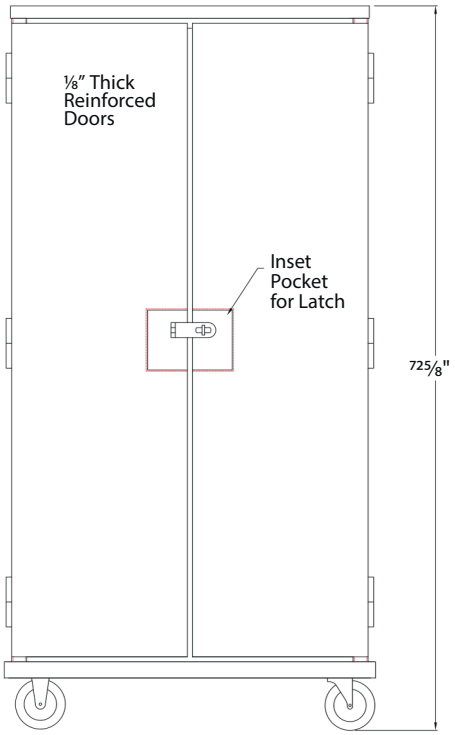

Material:
- Hi-tensile, corrosion-resistant, rust-proof, primary extruded aluminum,Type 6463-T5 alloy and 5052 H32-34 sheet aluminum.

Construction:
- All heli-arc welded.

Shelves:
- Unit equipped with three solid shelves that are constructed out of .080" aluminum sheet, adjustable on 2" centers.

Base:
- 1/8" Sheet base, reinforced with 1 1/4" x 1 1/2" x .070" wall tube; 4" x 4 1/2" x 3/8" thick pre-tapped caster plates are welded to the base.

Doors & Sides:
- Constructed of 1/8" Sheet, Door is reinforced with tube and have lockable latch to increase security.

Casters:
- Four 5" diameter casters, 2" wide with polyurethane tire; two swivel and two rigid.

Aluminum Security Cage

Model No.	Size W-H-D	Interior Shelves	Shelf Size	Clear Space	Ship Lbs.
Solid Security Cage With Adjustable Shelves					
99551	37 1/4" x 72 3/4" x 26"	3	22 1/2" x 35"	Adj.	175

Four 5" plate type swivel casters.

Options: Options may not be NSF Certified. Contact the factory.

Prison Package - Tamper Resistant Screws - Add "PP" suffix to model number.

(800)397-6690 • Fax (563) 391-1321
4710 N Brady St • Davenport, IA 52806
www.barroneq.com