BARRON
EQUIPMENT COMPANY INC.
OVERHEAD DOORS

Security Cabinet

- NAI - 99814



99814

Protect valuables, dangerous materials, and other supplies with the New Age Security Cabinet with Four Shelves. This security cabinet is constructed of heavy-duty, yet lightweight aluminum with mesh doors for added visibility. The cabinet features four shelves to store and organize supplies, and a drop-down hasp secures them during transport.

- Provides safe, lockable security of valuable and/or dangerous materials.
  - Ideal "emergency box" for schools
  - Use for chemical storage
- All welded aluminum construction.
- Equipped with double doors with a stainless steel hasp and replaceable stainless steel hinges.
- Comes Standard with full perimeter bumper.
- Five-Year Guarantee against material defects and workmanship.
- Lifetime Guarantee against rust and corrosion.



Interior T-Bar Shelves



All Welded Handle



Full Perimeter Bumper

(800)397-6690 • Fax (563) 391-1321
4710 N Brady St • Davenport, IA 52806
www.barroneq.com

BARRON EQUIPMENT COMPANY INC. OVERHEAD DOORS

Security Cabinet

- NAI - 99814

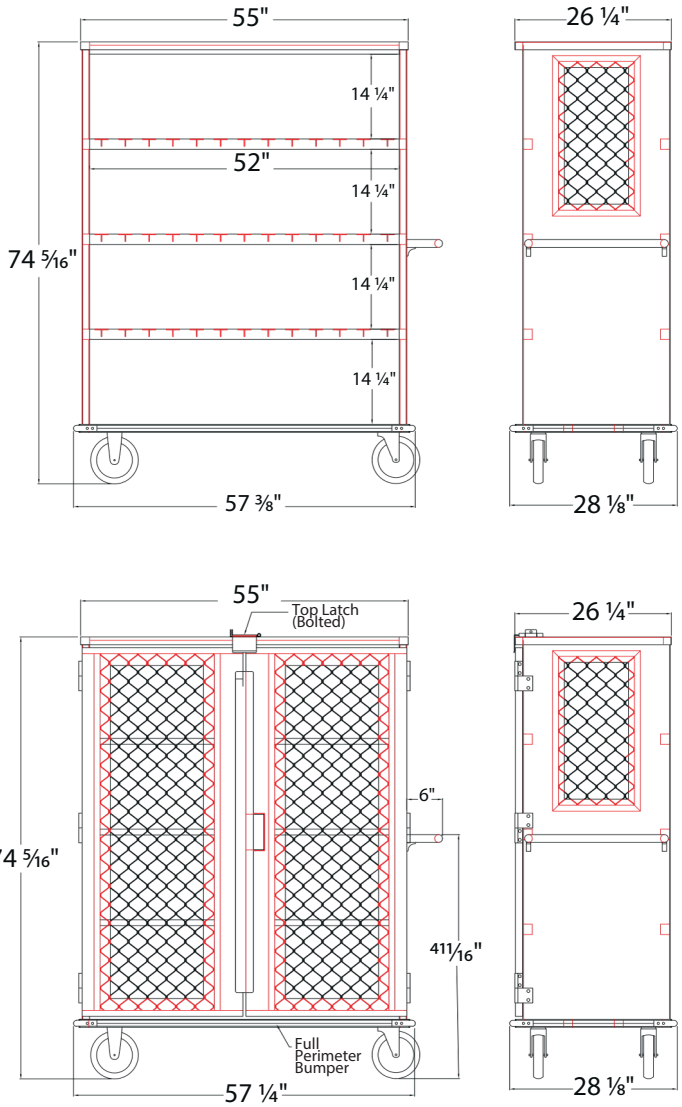

MATERIAL
- Hi-tensile, corrosion resistant, rust proof, primary extruded aluminum, Type 6463-T5 alloy and 5052 H32 sheet aluminum.

CONSTRUCTION
- All heli-arc welded.

SHELVES
- Unit equipped with three T-Bar shelves, spaced 14½" apar t.

BASE
- 1/8" Sheet base, reinforced with 1¼" x 1½" x .070" wall tube; 4" x 4½" x 3/8" thick pre-tapped caster plates are welded to the base.
- Equipped with a full perimeter bumper
-

DOORS & SIDES
- 1/83/8" Sheet with cutouts for amplimesh material.

C ASTERS
- Equipped with four 8" plate polyurethane type casters - one rigid, one rigid with brake, one swivel, one swivel with brake.

GUARANTEES
- Five-Year Guarantee against material defects and workmanship.
- Lifetime Guarantee against rust and corrosion.

▶ Security Cabinet

Model No.	Size W-H-D	Interior Shelves	Shelf Size	Clear Space	Lock Type	Ship Lbs.
Mobile Security Cabinet						
9 9814	57¼" x 74½" x 28¼"	4	24½" x 52"	14¼ "	Top Latch with Hasp	376
Equipped with four 8" plate polyurethane type casters; two rigid, two swivel with brake.						

Options: Options may not be NSF Certified. Contact the factory.

Prison Package - Tamper Resistant Screws - Add "PP" suffix to model number.

(800)397-6690 • Fax (563) 391-1321
4710 N Brady St • Davenport, IA 52806
www.barroneq.com