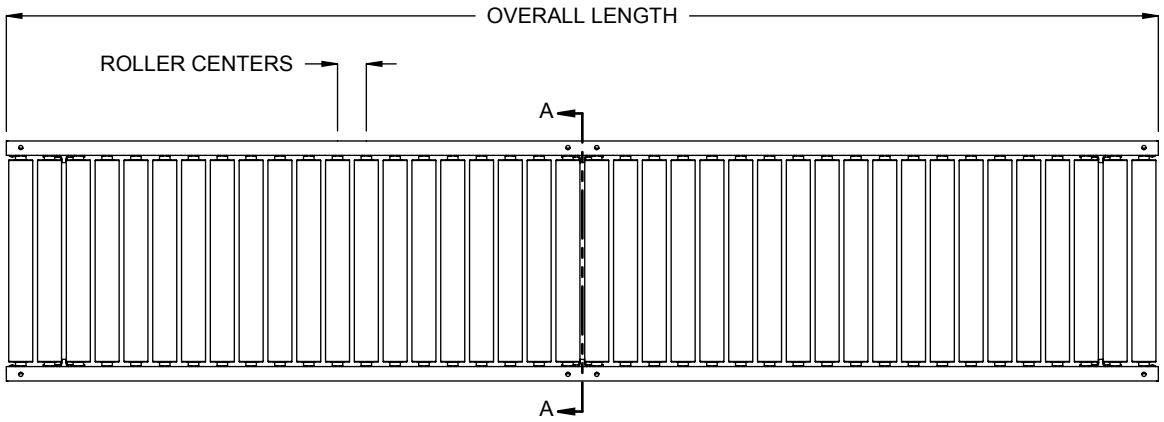

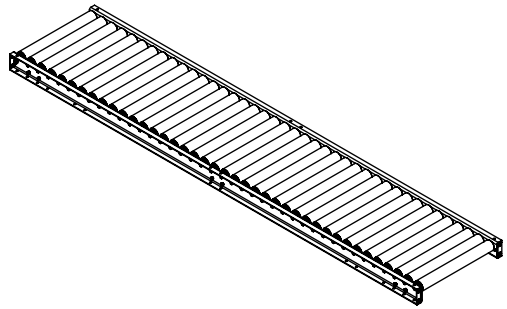

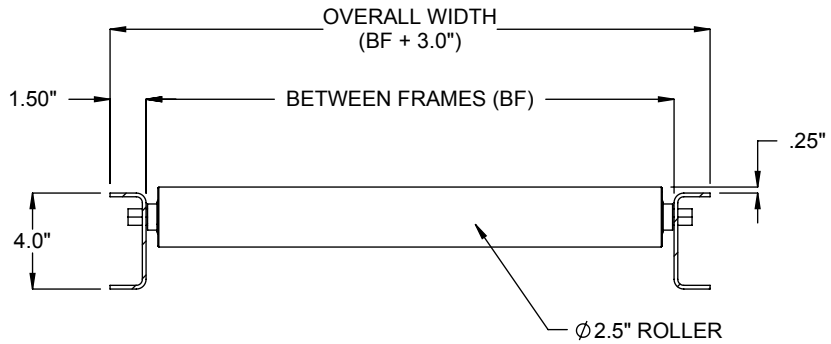

SECTION A-A
F96 CHANNEL, 4" x 1-1/2" x 8ga

SPECIFICATIONS

BETWEEN FRAMES: 6" - 61"	**LENGTH:** 18" - 120"
ROLLER CENTERS: 3", 4.5", 6", 9", 12"	
ROLLERS: 2511 Roller - 2.5" dia., 11ga wall tubes. 2607 Roller - 2.625" dia., 7ga wall tubes. Both rollers with 11/16" hex cold rolled steel axle, spring retained. Standard A50 bearings are light oil lubricated. Optional bearings include combinations of precision, semi-precision and non-precision construction with light oil or grease packed lubrication. 750 lbs roller capacity.	
FRAMES: Standard F96 set high 4" x 1-1/2" x 8ga formed steel channel with bolted 2" x 8ga galvanized angle crossties.	
ROLL COVERS: Optional Orange Polyurethane, 1/8" wall or galvanized tube.	
COUPLINGS: Bolted butt couplers standard on both ends of channel.	
FRAME FINISH: Standard finish is OSHA safety blue powder. Optional colors include green, beige, gray, orange, black and yellow.	

Model: 2511 - Gravity Roller Conveyor, 2.5 diameter 11 gauge roller
2607 - Gravity Roller Conveyor, 2.625 diameter 7 gauge roller

REV
0

FRAME OPTIONS:

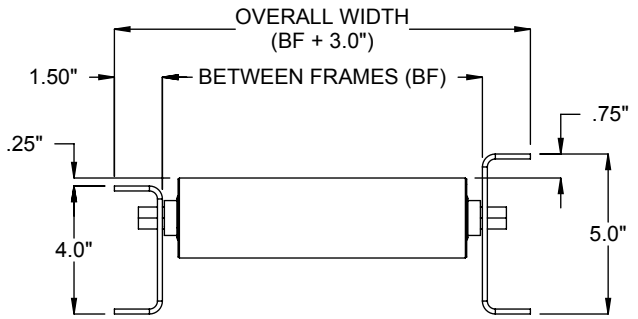

F19 CHANNEL, 4" x 1-1/2" x 8ga & 5" x 1-1/2" x 8ga

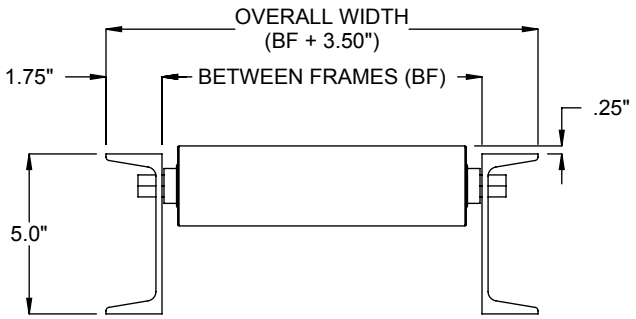

F21 CHANNEL, 5@6.7#

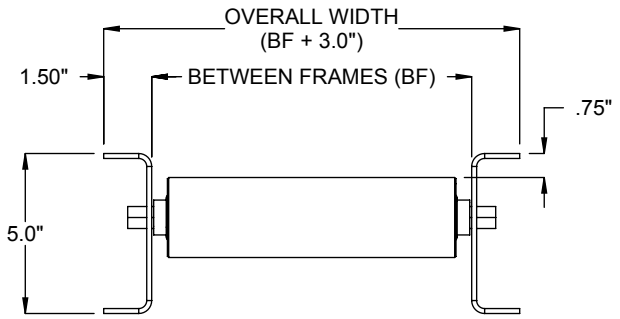

F39 CHANNEL, 5" x 1-1/2" x 8ga

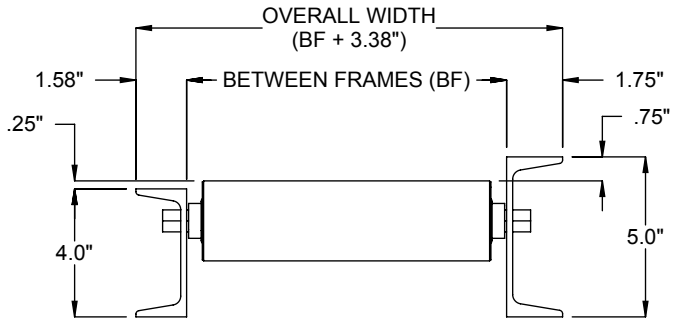

F49 CHANNEL, 5@6.7# & 4@5.4#

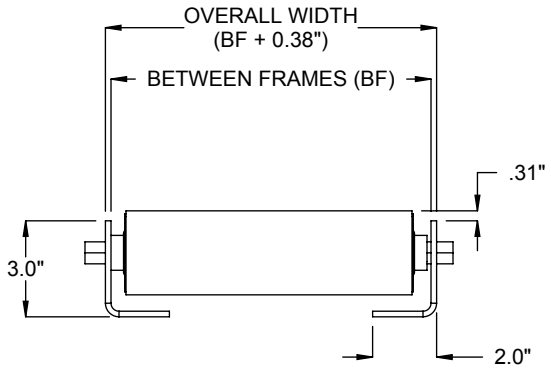

F51 ANGLE, 3" x 2" x 8ga
TOED IN

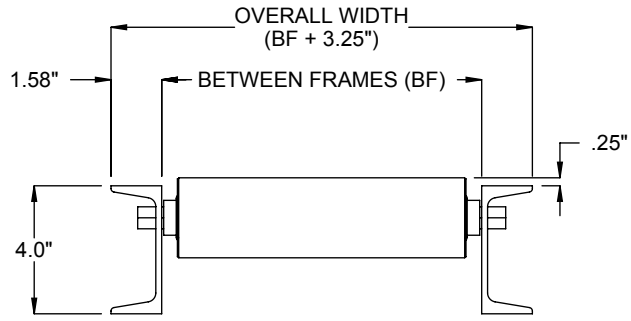

F53 CHANNEL, 4@5.4#

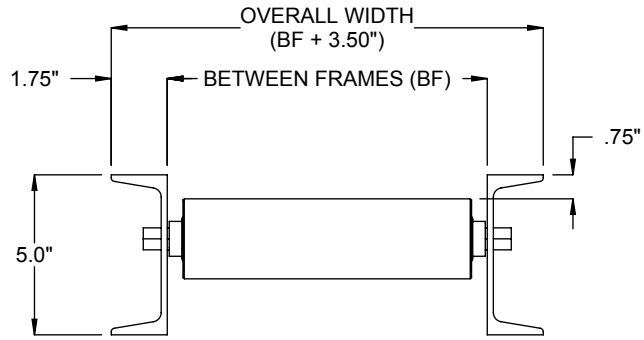

F54 CHANNEL, 5@6.7#

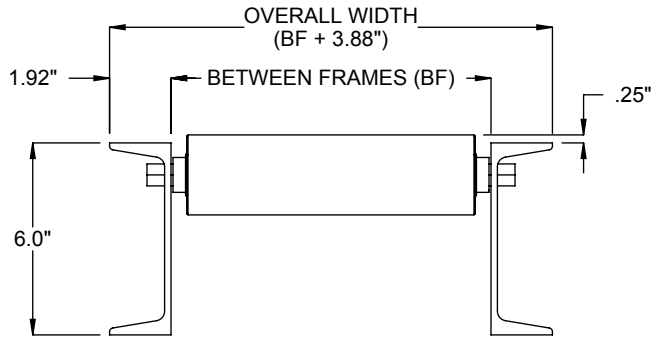

F55 CHANNEL, 6@8.2#

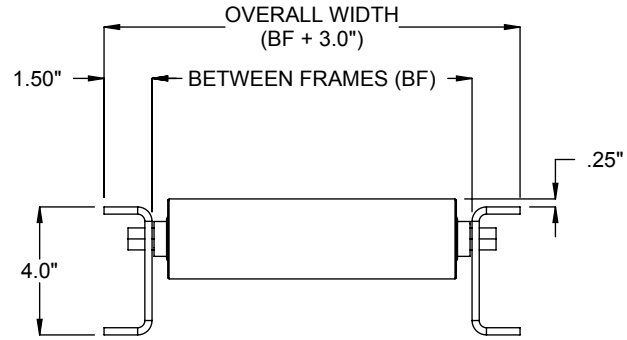

F67 CHANNEL, 4" x 1-1/2" x 4ga

Model:	2511 - Gravity Roller Conveyor, 2.5 diameter 11 gauge roller 2607 - Gravity Roller Conveyor, 2.625 diameter 7 gauge roller	REV 0